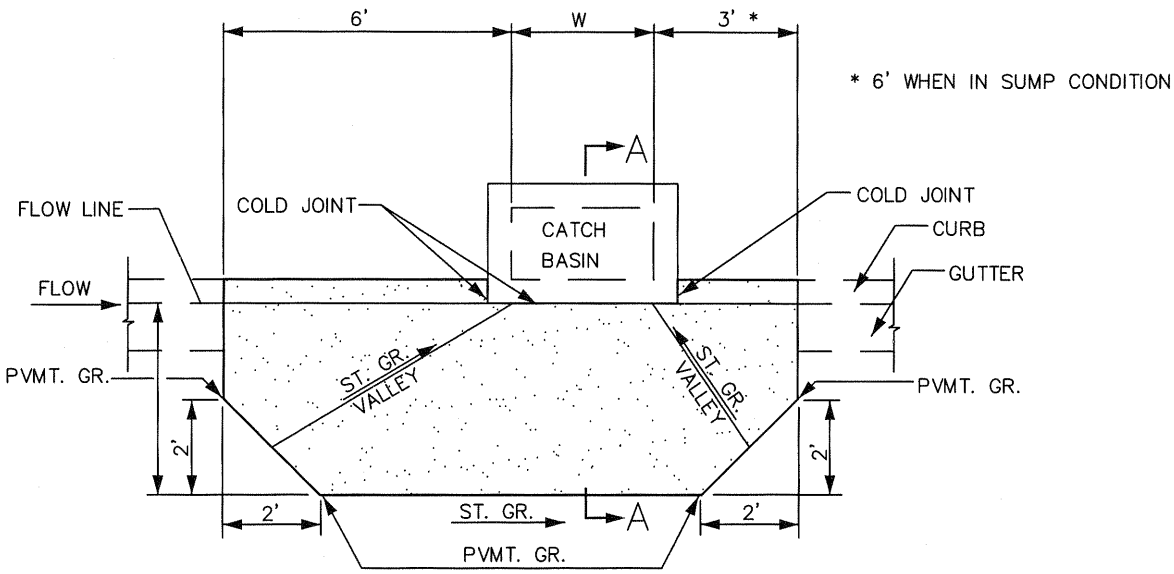

PLAN

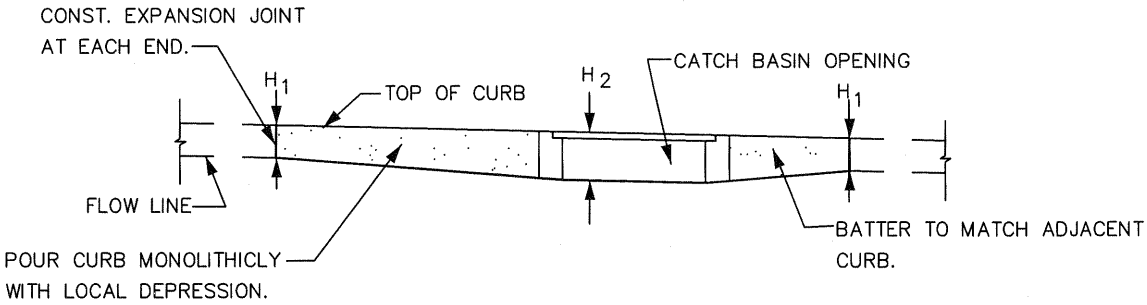

ELEVATION AT CURB

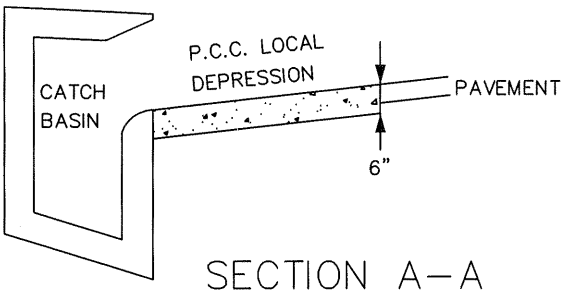

SECTION A–A

NOTES

1. H_1 = CURB FACE
2. H_2 = H_1 + 0.33' OR AS SPECIFIED
3. W = LENGTH OF CATCH BASIN OPENING
4. CONCRETE TO BE CLASS 560–C–3250 PER SECTION 201 S.S. PWC
5. MANHOLE FRAME AND COVER ALHAMBRA FOUNDARY A–1530B OR EQUAL

REGISTERED PROFESSIONAL ENGINEER
JOHN P. SULLIVAN
No. 24079
Exp. 12-31-07
CIVIL
STATE OF CALIFORNIA

APPROVED BY:			
JOHN P. SULLIVAN CITY ENGINEER	24079 RCE	8/08/06 DATE	
RECOMMENDED:			
ASSISTANT CITY ENGINEER	33340 RCE	8/07/06 DATE	

REV	DESCRIPTION	BY	APP'D	DATE

CITY OF ONTARIO

LOCAL DEPRESSION - FOR CATCH BASIN INLET

STANDARD DRAWING NUMBER

3005