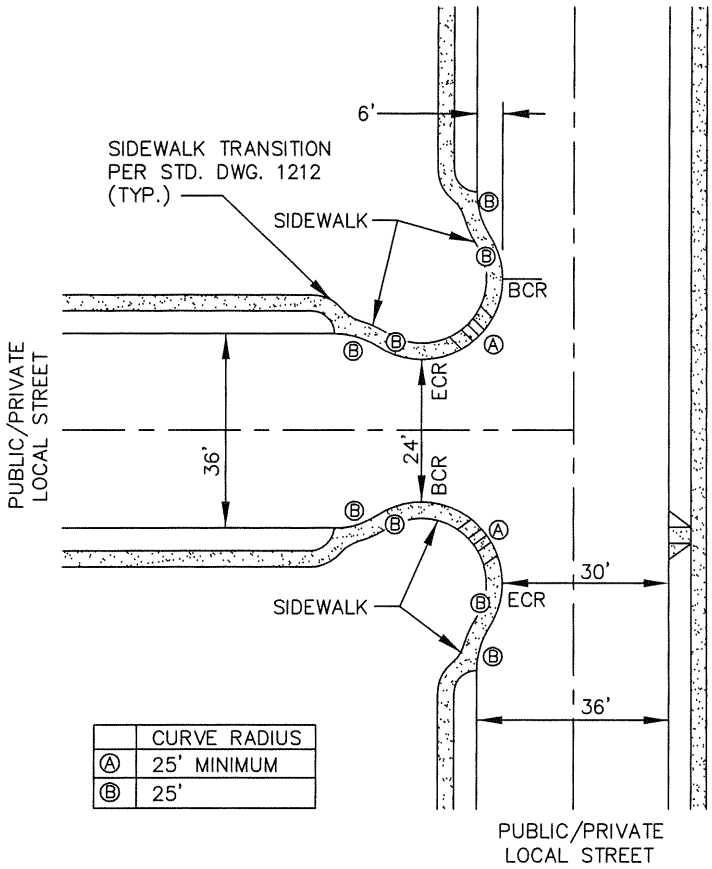

	CURVE RADIUS
Ⓐ	25' MINIMUM
Ⓑ	25'

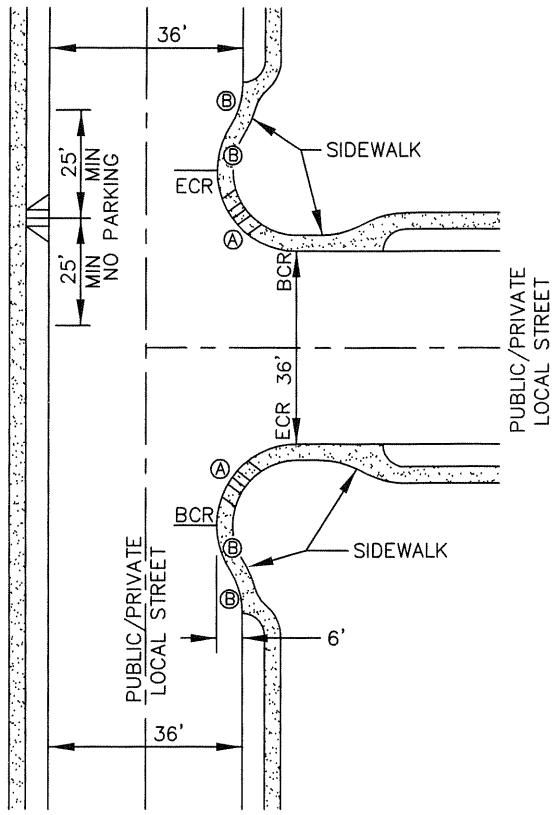

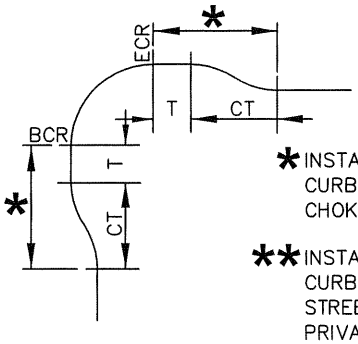

*INSTALL NO PARKING (SIGNS OR RED CURB) FROM BCR/ECR TO END OF CHOKER TRANSITION (CT + T)

**INSTALL 25' NO PARKING (SIGNS OR RED CURB) ADJACENT TO CURB RETURN ON STREETS WITHOUT CHOKERS (EXCEPT ON PRIVATE ALLEYS WHICH ARE NO PARKING)

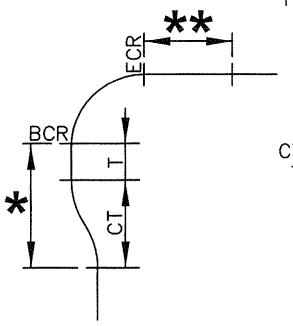

CT = CHOKER TRANSITION
T = TANGENT (OPTIONAL. WHEN USED SHOW DIMENSIONS ON PLAN.)

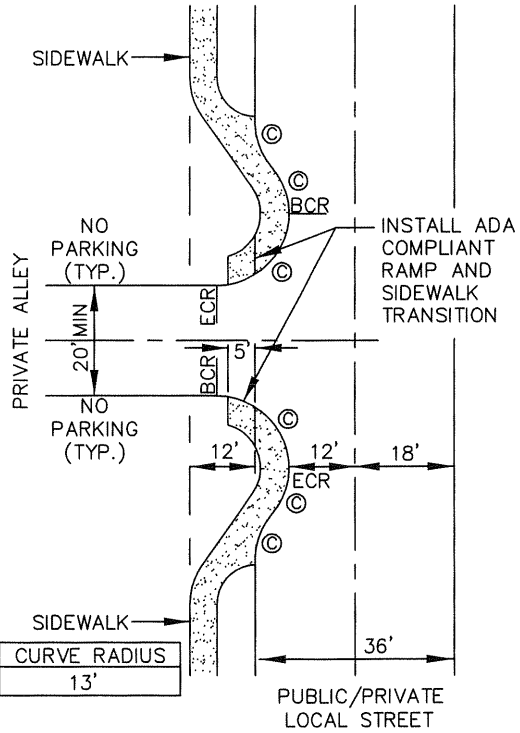

	CURVE RADIUS
Ⓒ	13'

NOTES

1. STREET DRAINAGE SHALL FOLLOW THE CURB AND GUTTER.
2. WHERE CATCHBASINS ARE NOT USED AT CHOCKERS MINIMUM FLOWLINE GRADE SHALL BE 0.60%.
3. SEE CITY OF ONTARIO DESIGN GUIDELINES – TRAFFIC AND TRANSPORTATION FOR CHOKER PLACEMENT GUIDANCE.

APPROVED BY:			
JOHN P. SULLIVAN CITY ENGINEER	24079 RCE	05/21/07 DATE	
RECOMMENDED:			
ASSISTANT CITY ENGINEER	44485 RCE	05/21/07 DATE	

REV	DESCRIPTION	BY	APP'D	DATE

CITY OF ONTARIO

NMC
LOCAL STREET
CHOKERS

STANDARD DRAWING NUMBER
1110