SOLID WASTE DEPARTMENT
REFUSE AND RECYCLING PLANNING MANUAL

ONTARIO MUNICIPAL UTILITIES COMPANY
1425 S. Bon View Avenue
Ontario, CA 91761

TABLE OF CONTENTS

Introduction	3
Construction and Demolition Recycling Plan	3
Residential Refuse and Recycling Standards	4
Multi-Family Refuse and Recycling Standards	5
Commercial and Industrial Refuse and Recycling Standards	6
Site Plan Notations	7
Compactors	7
Container Dimensions	7
Refuse and Recycling Minimum Service Requirements	8
City of Ontario Enclosures Drawings	9
Ontario Municipal Code	12
San Bernardino County Code	17

INTRODUCTION

The purpose of this Refuse and Recycling Planning Manual is to assist developers in meeting the City of Ontario's requirements for refuse and recycling storage and access for service, as well as address the City's recycling goals. This manual contains standards for residential, commercial and industrial container storage and vehicle access, minimum levels of service, and Municipal Code sections for reference.

Construction and Demolition Recycling Plan

The City of Ontario requires all qualifying building and demolition permit applicants to submit a Construction and Demolition Recycling Plan. The applicant must estimate how they will recycle 50% of the waste generated from the project, and must demonstrate the results at the completion of the project. The plan is distributed at the time of application for a permit from the Building Department.

Reference: Municipal Code Sec.6-3.602

RESIDENTIAL REFUSE AND RECYCLING STANDARDS—AUTOMATED CONTAINERS

Container Storage Standards

A. Detached single family residential refuse, recycling and green waste containers require a minimum storage area of 36" x 96" to accommodate 3 cans.
B. Multi-family complexes with individual service require a minimum storage area of 36" x 60" if no yard debris for green waste collection exists.
C. External refuse, recycling and green waste storage may only be located in an interior courtyard, or rear or side yard with appropriate access.
D. Containers may not be stored in a location that is visible from the street, in front or street side yard, or in required parking areas.
E. If service location is in an alley, containers may not be stored in the alley except as specified for collection.
F. It is recommended that each residence have a pad placed in the alley for refuse, recycling and green waste containers. The recommended specifications for the pad are 36" x 96" with standard thickness.

Vehicle Access Standards

A. Refuse vehicle turning radii
   Inside radius ……..…….28 feet
   Outside radius ……...42 feet

B. Refuse vehicle height clearance .....…15 feet

C. Refuse vehicle width clearance .....…15 feet

D. Refuse vehicle backing distance…….……150 feet, straight only

E. Alleys must be a minimum of 20 feet in width, and have enough room to allow for a 28 foot minimum turning radius when making turns at 90 degree intersections in the alley.

F. Containers must not obstruct travel path of refuse vehicle, or compromise the ability of the refuse vehicle to safely service the containers.

Reference: Municipal Code Sec. 6-3.308

MULTI-FAMILY REFUSE AND RECYCLING STANDARDS
BIN COLLECTION

Container Storage Standards

A. Through circulation shall be provided for solid waste vehicles.
B. All refuse enclosures shall be located on major drives within developments to achieve adequate circulation of refuse vehicles.
C. A five foot wide concrete apron, with a 2% maximum pitch, shall be placed in front of all refuse enclosures to allow for safe and efficient removal of bins. No drainage V-ditches or catch basins shall be allowed within the five foot apron.
D. To encourage recycling, enclosures designed for a maximum of one (1) bin are prohibited. Enclosures shall allow for storage of recycling bins or cans in addition to refuse bins.
E. Enclosures must be designed so that refuse and recycling containers may be accessed by the generator and serviced by the service provider without moving other bins.
F. Pedestrian access shall be independent of service provider doors.
G. Enclosures must be designed so that bin lids face the pedestrian access location.
H. Enclosures must be designed with a roof or overhang at least 8 vertical feet from the ground. Enclosures shall be constructed with a solid roof meeting architectural and structural design criteria from Planning and Building Departments.
I. Enclosures shall be located so that refuse vehicles can pull to within 5 feet of gates.
J. Enclosures located closer than 5 feet to an adjacent structure shall be protected by automatic fire sprinklers approved by the Ontario Fire Department.
K. Gate stop bollards shall be installed to prevent enclosure gates from swinging into adjacent parking stalls. Steel cane bolt sleeves shall be installed in the ground outside of bin enclosure gates to prevent gates from swinging shut.
L. Enclosures shall be screened with plant material whenever possible.
M. Refer to City of Ontario Enclosure Drawings—p. 9, 10, 11

Vehicle Access Standards

A. Refuse vehicle turning radii
   Inside radius ……..…….28 feet
   Outside radius ……...42 feet

B. Refuse vehicle height clearance .....…15 feet

C. Refuse vehicle width clearance .....…15 feet

D. Refuse vehicle backing: Straight only. Distance determined on case by case basis.

E. A minimum 25 foot distance must be maintained in front of a bin enclosure. The enclosure must face the driveway, not parking spaces.

F. Alleys must be a minimum of 20 feet in width, and have enough room to allow for a 28 foot minimum turning radius when making turns at 90 degree intersections in the alley.

G. Containers must not obstruct travel path of refuse vehicle, or compromise the ability of the refuse vehicle to safely service the containers.

Reference: Municipal Code Sec. 6-3.314

COMMERCIAL AND INDUSTRIAL REFUSE AND RECYCLING STANDARDS
BIN COLLECTION

Container Storage Standards

A. Through circulation shall be provided for solid waste vehicles.
B. All refuse enclosures shall be located on major drives within developments to achieve adequate circulation of refuse vehicles.
C. A five foot wide concrete apron, with a 2% maximum pitch, shall be placed in front of all refuse enclosures to allow for safe and efficient removal of bins. No drainage V-ditches or catch basins shall be allowed within the five foot apron.
D. To encourage recycling, enclosures designed for a maximum of one (1) bin are prohibited. Enclosures shall allow for storage of recycling bins or cans in addition to refuse bins.
E. Enclosures must be designed so that refuse and recycling containers may be accessed by the generator and serviced by the service provider without moving other bins.
F. Enclosures must be designed so that bin lids face the pedestrian access location.
G. Enclosures must be designed with a roof or overhang at least 8 vertical feet from the ground. Enclosures shall be constructed with a solid roof meeting architectural and structural design criteria from Planning and Building Departments.
H. Enclosures shall be located so that refuse vehicles can pull to within 5 feet of gates.
I. Enclosures located closer than 5 feet to an adjacent structure shall be protected by automatic fire sprinklers approved by the Ontario Fire Department.
J. Gate stop bollards shall be installed to prevent enclosure gates from swinging into adjacent parking stalls. Steel cane bolt sleeves shall be installed in the ground outside of bin enclosure gates to prevent gates from swinging shut.
K. Enclosures shall be screened with plant material whenever possible.
L. Refer to City of Ontario Enclosure Drawings—p. 9, 10, 11

Vehicle Access Standards

A. Refuse vehicle turning radii
   Inside radius ……..……..28 feet
   Outside radius ……42 feet

B. Refuse vehicle height clearance ..... ……15 feet

C. Refuse vehicle width clearance ..... ……15 feet

D. Refuse vehicle backing: Straight only. Distance determined on case by case basis.

E. A minimum 25 foot distance must be maintained in front of a bin enclosure. The enclosure must face the driveway, not parking spaces.

F. Alleys must be a minimum of 20 feet in width, and have enough room to allow for a 28 foot minimum turning radius when making turns at 90 degree intersections in the alley.

G. Containers must not obstruct travel path of refuse vehicle, or compromise the ability of the refuse vehicle to safely service the containers.

Reference: Municipal Code Sec. 6-3.314

SITE PLAN NOTATIONS

The location of any refuse and recycling enclosure or compactor shall be drawn on the site plan and labeled. The dimensions of the enclosure or compactor shall be noted on the site plan. The following are examples of notes as they should appear on the site plan:

Refuse and recycling enclosure to City standards for ___ trash bin(s) and ___ recycling bin(s), or ___ ___ cubic yard compactor(s) per City standards.

COMPACTORS

Roll Off Compactors

A. Compactor units shall be compatible with current City of Ontario refuse and recycling collection equipment.
B. Pad for containers shall be concrete. The concrete pad shall extend 1 foot along sides and 3 feet longer than container.
C. Requires an area 15 feet by 85 feet for compactor, container and collection vehicle.
D. Bins are assumed to be located outside of building footprint unless otherwise noted.

Front Load Compactors

A. Compactor units shall be compatible with current City of Ontario refuse and recycling collection equipment.
B. Use container storage and vehicle access standards located on page 5 of this manual.

CONTAINER DIMENSIONS

	Automated Cans		
	96 gallon	64 gallon	32 gallon
Height	45” (3’9”)	38” (3’2”)	38” (3’2”)
Width	28” (2’4”)	27.5” (2’3.5”)	20” (1’8”)
Depth	35” (2’11”)	30” (2’6”)	24” (2’)

	Bins			
	1.5 cubic yard	3 cubic yard	4 cubic yard	6 cubic yard
Height	44” (3’8”)	60” (5’)	67” (5’7”)	76” (6’4”)
Width	81” (6’9”)	81” (6’9”)	81” (6’9”)	81” (6’9”)
Depth	34” (2’10”)	46” (3’10”)	56” (4’8”)	86” (7’2”)

REFUSE AND RECYCLING MINIMUM WEEKLY SERVICE REQUIREMENTS

RESIDENTIAL	REFUSE AND RECYCLING
Single Family Detached	32, 64 or 96 gallon refuse, recycling and green waste cans per unit. (Refuse can is required.)
Multi-family	1.5-cubic yards of refuse per 4 units, or 32, 64 or 96 gallon refuse, recycling and green waste cans per unit

COMMERCIAL	REFUSE AND RECYCLING
Retail Shopping Center	4 cubic yards per 8 units
Multi-Tenant Retail Shopping	4 cubic yards for every 2 tenants
Office	4 cubic yards per 15,000 square feet
Hotel or Motel	4 cubic yards per 10,000 square feet
Restaurant or Mini-Mart	Two 4 cubic yards per unit
Vehicle, Appliance, Furniture, Repair Shop	4 cubic yards per 8,000 square feet

INDUSTRIAL	REFUSE AND RECYCLING
Industrial Park	4 cubic yards per 8,000 square feet
Multi-Tenant Industrial Park	4 cubic yards for every 2 tenants
Warehouse	4 cubic yards per 30,000 square feet

CONTACT US

If you have any questions about this Refuse and Recycling Planning Manual, please contact the City of Ontario Solid Waste Department at (909) 395-2664.

NOTES:

1. ALL METAL TO RECEIVE ONE COAT OF ZINC CHROMATE PRIMER AND TWO COATS OF MEDIUM ALKYD PAINT.
2. DECORATIVE EXTERIOR FINISH TO BE COMPATIBLE WITH BUILDING
3. STRUCTURAL DESIGN TO WITHSTAND 90 MPH MIN. WIND LOAD
4. SOLID ROOF TO MEET ARCHITECTURAL AND STRUCTURAL DESIGN CRITERIA FROM PLANNING AND BUILDING DEPARTMENTS.

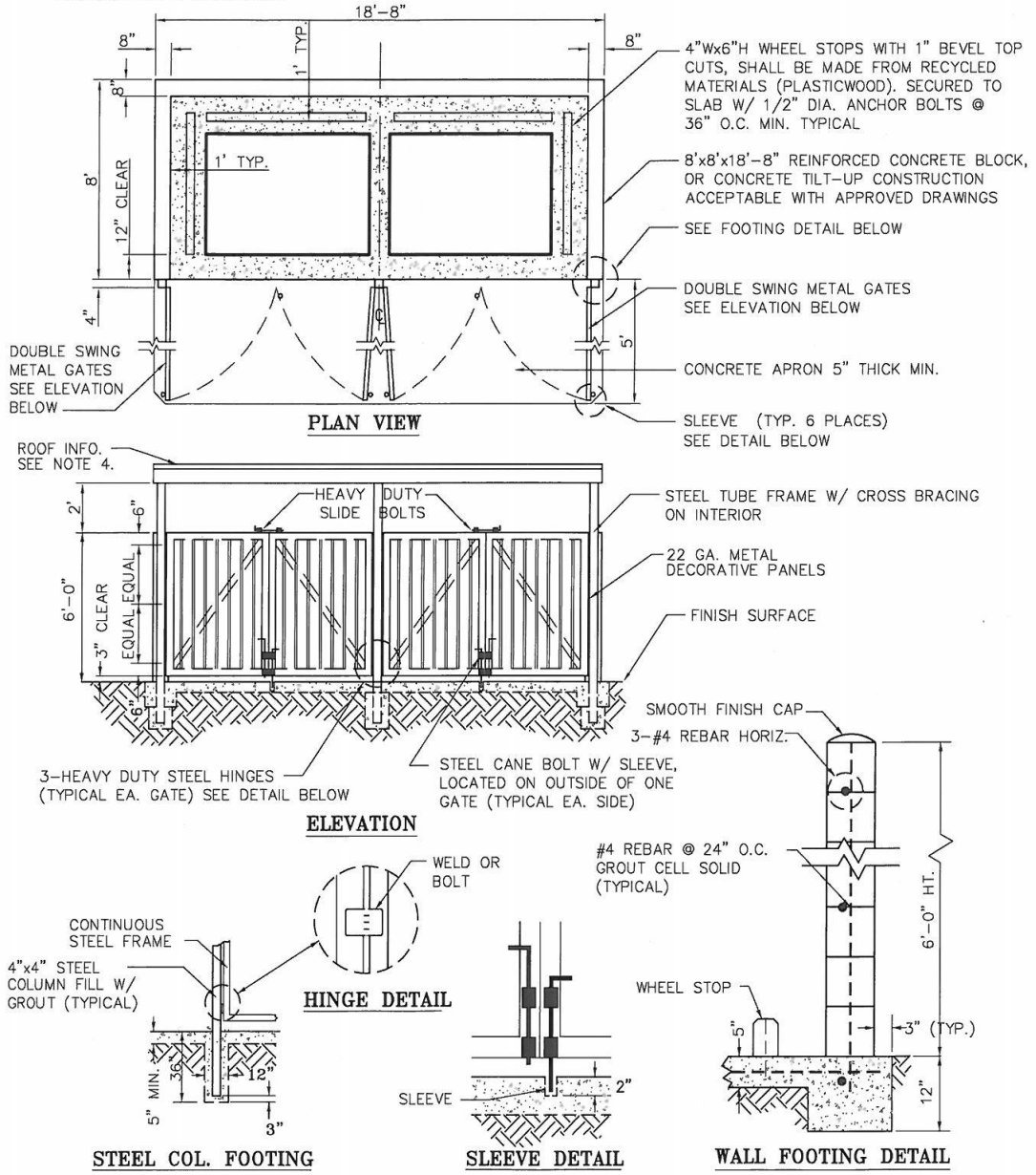

CITY OF ONTARIO

COMMERCIAL REFUSE AND RECYCLING ENCLOSURE
(TWO 4 CU. YD. BINS)

NOTES:

1. ALL METAL TO RECEIVE ONE COAT OF ZINC CHROMATE PRIMER AND TWO COATS OF MEDIUM ALKYD PAINT.
2. DECORATIVE EXTERIOR FINISH TO BE COMPATIBLE WITH BUILDING
3. STRUCTURAL DESIGN TO WITHSTAND 90 MPH MIN. WIND LOAD
4. SOLID ROOF TO MEET ARCHITECTURAL AND STRUCTURAL DESIGN CRITERIA FROM PLANNING AND BUILDING DEPARTMENTS.

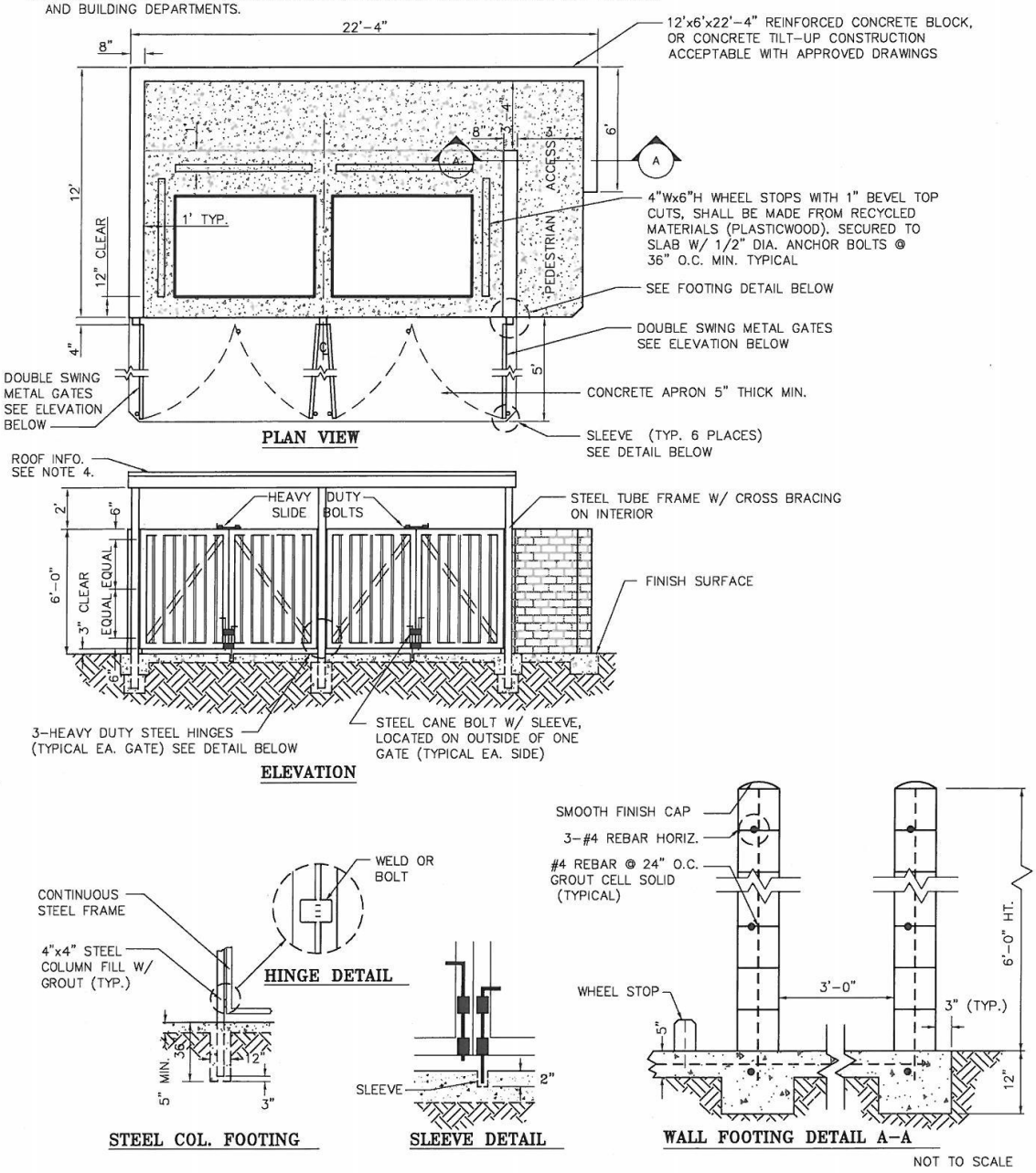

CITY OF ONTARIO

MULTIFAMILY OR COMMERCIAL REFUSE AND RECYCLING ENCLOSURE (TWO 4 CU. YD. BINS)

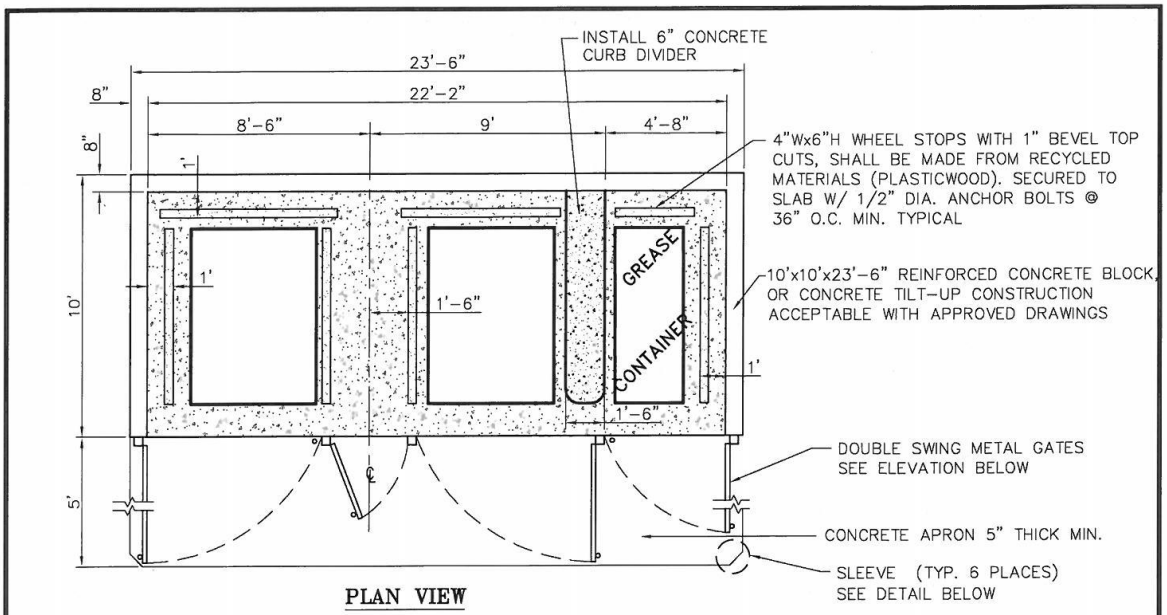

PLAN VIEW

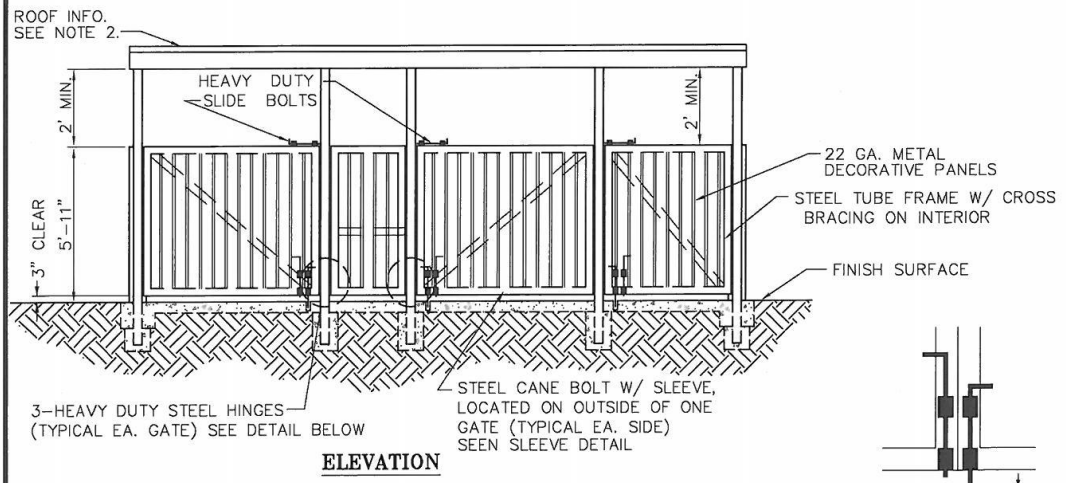

ELEVATION

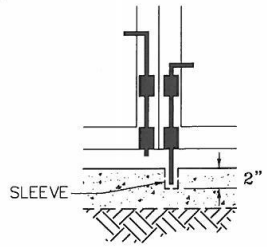

SLEEVE DETAIL

NOTES

1. RECYCLABLES CONTAINER MAY BE OMITTED FOR SMALL FOOD SERVICE ESTABLISHMENTS AS APPROVED BY THE CITY.
2. ENCLOSURE FOR FOOD SERVICE ESTABLISHMENTS SHALL BE CONSTRUCTED WITH A SOLID ROOF MEETING ARCHITECTURAL AND STRUCTURAL DESIGN CRITERIA FROM PLANNING AND BUILDING DEPARTMENT

CITY OF ONTARIO

COMMERCIAL FOOD SERVICE REFUSE AND RECYCLING ENCLOSURE (TWO 4 CU. YD. BINS)

Sec. 6-3.308. Residential receptacles, placement.

(a) Residential refuse, recycling and green waste receptacles shall be placed for collection by 6:00 a.m. on the scheduled collection day, but not prior to the evening proceeding the collection day. Receptacles shall be removed no later than the evening after collection day. Such receptacles shall be placed for collection along the alley where a useable alley exists. Where there is no useable alley, such receptacles shall be placed for collection near the street curb. Where no curbs or walks exist, such receptacles shall be placed in a location convenient for collection along the street right-of-way and placed at least three (3) feet from any mailboxes, cars, or any other obstructions for safety and efficiency.

(d) It shall be the customer's responsibility to provide means of entering and exiting premises, adequate collection vehicle turning radius, and vertical and horizontal clearance for the Solid Waste Collectors and equipment.

(§ 3, Ord. 2806, eff. December 21, 2004)

Sec. 6-3.314. Commercial storage standards.

All new development projects utilizing commercial collection bins rather than individual curbside collection of refuse which:

(a) Have submitted a site plan on or after September 1, 1993 for development plan review as prescribed by Title 9, Planning and Zoning;

(b) Are existing development projects which will be adding thirty percent (30%) or more to the existing floor area; or

(c) Are existing development projects which will be adding one thousand (1,000) square feet or more, shall meet the requirements of the following provisions:

(1) Each development shall include an area set aside for the provision of adequate and accessible enclosures for the storage of recyclable materials and refuse in proper receptacles. The design, construction and accessibility of the enclosures shall be shown on the site plan in conformance with the standards and specifications of the Solid Waste Department and the design guidelines listed below:

(i) The recycling collection area and the refuse collection area shall be adjacent to one another and in an enclosure(s) conveniently located next to the building(s) it serves and easily accessible to collection vehicles. No enclosure shall be located in any required setback.

(ii) The enclosure(s) shall be screened from public view.

(iii) The exterior doors of the enclosure(s) for recyclables shall be posted with permanent, reflectorized signs stating "Recyclables Only" and "Solamente Reciclajes" in letters a minimum of one and one-half (1.5) inches in height for a total sign area within a minimum width of ten (10) inches and a minimum length of fourteen (14) inches. Each receptacle shall be painted with a sign identifying which material is to be disposed of in it. General instructions about how to recycle shall be posted within the enclosure or near the receptacle area; the instructions shall be visible to the users of the receptacles. The name of the person or business responsible for maintenance of the receptacle shall be posted within the enclosure.

(iv) The receptacles for the recyclable materials, with the exception of twenty to forty (20-40) cubic yard roll-off containers, shall be permanently protected from adverse environmental conditions with lids or other methods approved by the Solid Waste Department and the Fire Department. The lids shall be kept closed when the receptacles are not being loaded or emptied.

(v) The enclosure(s) shall be secured to prevent the removal of recyclable materials by unauthorized persons while permitting access to it by authorized persons.

(2) The property owner shall be responsible for maintenance of the enclosure(s) in a clean condition.

(3) This section conforms to the California Solid Waste and Recycling Access Act of 1991 (Pub. Res. Code § 42900 *et seq*.) related to the provision of adequate areas for collecting and loading recyclable materials.

(§ 3, Ord. 2806, eff. December 21, 2004)

Sec. 6-3.601. Business recycling plan.

(a) A business recycling plan shall be submitted by customers using commercial collection service and proposing to conduct the following business activity:

(1) Addition of a new development for which a site plan for development review has been submitted as prescribed by Title 9, Planning and Zoning;

(2) Addition of thirty percent (30%) or more to the existing floor area of any existing development; or

(3) Addition of one thousand (1,000) square feet or more to any existing development projects.

(b) Submitted plans shall include but not be limited to the following information:

(1) A written description of the projected annual waste generation rates;

(2) The estimated type of generated waste by volume;

(3) The measures to be taken to reduce waste;

(4) The methods to be used to separate recyclable material from the waste stream and temporarily store them inside the building prior to transport to the outside storage area for collection by an authorized recycler; and

(5) Identification of the proposed business used to collect or receive recycled material.

(c) All customers subject to the provisions of this chapter shall submit a business recycling plan to the Public Works/Community Services Agency within thirty (30) days of receipt of written notice. Business recycling plans shall be considered complete once final approval is made by the Public Works/ Community Services Agency.

(d) All customers subject to the provisions of this chapter and regardless of permit status, shall implement, at a minimum, the measures identified in the business recycling plan for reduction of waste.

(e) Business recycling plans shall be updated at a frequency as determined by the City. In reviewing the plan, the City may require the handling of special wastes.

(§ 3, Ord. 2806, eff. December 21, 2004)

Sec. 6-3.602. Construction and demolition recycling plan.

Wastes going to landfill from construction and demolition activities must be minimized to the greatest extent possible by recycling, deconstruction for reuse, or by use of "green building" practices. Material targeted for recycling shall include concrete, asphalt, clean wood (unpainted or untreated), brick, metal, cardboard and sheetrock. The City Manager may modify the targeted materials based on available markets.

(a) A construction and demolition recycling plan shall be submitted for conducting the following types of development activities:

(1) The construction of any building other than a single-family residential building;

(2) The demolition or renovation of and/or additions of tenant improvements to any building other than a single-family residential building whereby the total costs are projected to be greater than or equal to One Hundred Thousand Dollars ($100,000.00);

(3) Any City-sponsored construction; or

(4) Any City-sponsored demolition or renovation whereby the total costs are projected to be greater than or equal to One Hundred Thousand Dollars ($100,000.00).

(b) A construction and demolition recycling plan is not required for smaller demolition and renovation projects within the City whose total costs are less than One Hundred Thousand Dollars ($100,000.00). Customers performing these types of projects shall be encouraged to divert at least fifty percent (50%) of all project-related construction and demolition debris from landfill to recycling or reuse operations.

(c) In preparing the construction and demolition recycling plan, customers for building or demolition permits involving the removal of all or part of an existing structure shall consider deconstruction to the maximum extent feasible.

(d) Plans may be required to be submitted on City-approved forms. Plans shall focus on diverting at least fifty percent (50%) of the total construction and demolition debris generated by the project for reuse or recycling, and shall include, but not be limited to, the following information:

(1) The estimated volume or weight of the project construction and demolition debris to be generated, by materials type, the estimated volume or weight of construction and demolition debris that can feasibly be diverted for reuse or recycling and the estimated volume or weight of construction and demolition debris that will be hauled as refuse. In estimating the volume or weight of materials identified in the Construction and Demolition Recycling Plan, the customer shall use the standardized conversion rates approved by the City for this purpose;

(2) A drawing that identifies an area for the loading and collection of recyclable materials with appropriate access for collection vehicles;

(3) A description of how the materials will be separated at the source and/or recycled by utilizing the services of a processor;

(4) Identification of the recycled materials to be used in the construction or remodeling of the facility;

(5) Identification of the proposed vendor or facility proposed to collect or receive recycled material; and

(6) A description of green building practices in use, if any.

(e) All customers with projects subject to the provisions of this chapter shall implement, at a minimum, the measures identified in the construction and demolition recycling plan and shall demonstrate compliance with the following construction site requirements:

(1) Construction waste and demolition debris shall be removed from the construction site on a regular basis and shall not be stored on site and in the open for a period in excess of four (4) weeks, provided that such waste is not hazardous or noxious and does not constitute a nuisance, in which case it must be appropriately secured and regularly removed from the construction site;

(2) Reasonable efforts shall be demonstrated to provide for segregation of recyclable construction materials and demolition debris for diversion from landfills; and

(3) Construction waste and demolition debris that may become windblown shall be containerized to prevent litter.

(f) No demolition permit or building permit shall be issued for any development activity subject to this chapter unless the construction and demolition recycling plan has been approved by the City.

(g) The issuance of the certificate of occupancy will be conditional on submittal of a report that documents the construction and demolition debris recycled. The report shall be submitted to the City Manager and shall contain the following information:

(1) The estimated and actual quantities of all construction waste and demolition debris listed in the construction and demolition recycling plan;

(2) Copies of recycling receipts or other pertinent documentation that demonstrates waste diversion and recycling in conformance with the approved construction and demolition recycling plan. Customers shall make reasonable efforts to ensure that all construction and demolition debris diverted for recycling or hauled to landfill are measured and recorded using the most accurate method of measurement available. To the extent practical, all construction and demolition debris shall be weighed by measurement on scales in

compliance with all regulatory requirements for accuracy and maintenance. For construction and demolition debris for which weighing is not practical due to small size or other considerations, a volumetric measurement shall be used. For conversion of volumetric measurements to weight, customers shall use the standardized conversion rates approved by the City for this purpose; and

(3) Any additional information the customer believes is relevant to determining its efforts to comply in good faith with this section.

(§ 3, Ord. 2806, eff. January 21, 2005, as amended by § 11, Ord. 2912, eff. January 1, 2010, and § 8, Ord. 2944, eff. January 6, 2012)

Sec. 6-3.603. Infeasibility exemption.

If a customer subject to this chapter experiences unique circumstances or emergency conditions that make it infeasible to comply with the diversion requirement, the City may waive the diversion requirements required under § 6-3.602(a). The customer shall indicate on the construction and demolition recycling plan the maximum rate of diversion feasible for each material and the specific circumstances that make it infeasible to comply with the diversion requirement.

(§ 3, Ord. 2806, eff. January 21, 2005)

33.0806 Residential Refuse Containers and Collection Standards.
Containers used for storage of Refuse until collection and/or transportation to an approved Solid Waste Facility shall comply with the following:

(a) Refuse containers shall be made of a durable, nonabsorbent material and shall be water-tight with a tight fitting lid or cover except as provided for in this Article.

(b) The user of any Refuse container shall ensure that lids are kept tightly attached so as to completely close off the container and to keep such containers in a clean condition without excessive build up of clinging, sticky or encrusted wastes on or in the container.

33.0807 Commercial Refuse Containers.
Refuse containers provided to commercial customers by a Permittee for storage and collection purposes shall comply with the requirements for Residential Refuse Containers in Section 33.0806 above, as well as the following applicable standards:

(b) Roll-Off Boxes are exempted from the provision for a tight-fitting lid or cover, provided Putrescible Wastes is fully contained in plastic bags or equivalent and such Roll-Off Boxes are covered or otherwise secured to prevent the blowing out, or other loss, of the contents whether such boxes are moving or stationary.