Circulation Plan Section 3

CIRCULATION PLAN

The MEREDITH INTERNATIONAL CENTRE *Circulation Plan* ensures efficient and safe access for residents, visitors and employees to, from, and through, the Specific Plan's six planning areas. It also provides an access plan for the transportation of goods to and from the businesses located in the CENTRE.

The main objective of the *Circulation Plan* is to provide direct, safe, and convenient vehicular and non-vehicular access. The design of the *Circulation Plan* creates functional efficiency for drivers, pedestrians, bicyclists, and transit users, enhances the aesthetics of the roadway network, and facilitates the movement of employees, visitors, shoppers, customers, and residents. Elements of the Specific Plan's vehicular and non-vehicular circulation system are discussed below.

A. VEHICULAR CIRCULATION PLAN

The circulation system depicted on Figure 3-1*, Conceptual Vehicular Circulation and Mobility Plan*, provides a vehicular traffic design that meets the needs of MEREDITH INTERNATIONAL CENTRE and accommodates through-traffic anticipated by the City of Ontario Policy Plan.

The Specific Plan property is served by a well-developed local roadway system consisting of North Vineyard Avenue to the west, North Archibald Avenue to the east, and East 4th Street to the north. Concurrent with the development of MEREDITH INTERNATIONAL CENTRE, improvements to North Vineyard Avenue and East 4th Street will result in completed street sections that are consistent with the City of Ontario's *Master Plan of Streets and Highways*. A description of the roadway improvements designed to occur concurrent with the development of MEREDITH INTERNATIONAL CENTRE are described on the following pages. All street improvements shall be constructed in accordance with applicable City of Ontario design standards and specifications.

Interstate 10 is located immediately south of the Specific Plan property and forms the southern boundary of Planning Area 2 and Planning Area 3. Interstate 10 is under the authority of CalTrans. Because the freeway falls completely outside of the Specific Plan boundaries, development of MEREDITH INTERNATIONAL CENTRE does not affect CalTrans' plans for the operation and maintenance of Interstate 10. Drivers traveling between the Specific Plan area and the freeway system have convenient access via the on- and off-ramps at North Vineyard Avenue and North Archibald Avenue.

MEREDITH INTERNATIONAL CENTRE property, 2014, as seen from the North Vineyard Avenue/Interstate 10 interchange. Source: GoogleEarth digitaljoe.

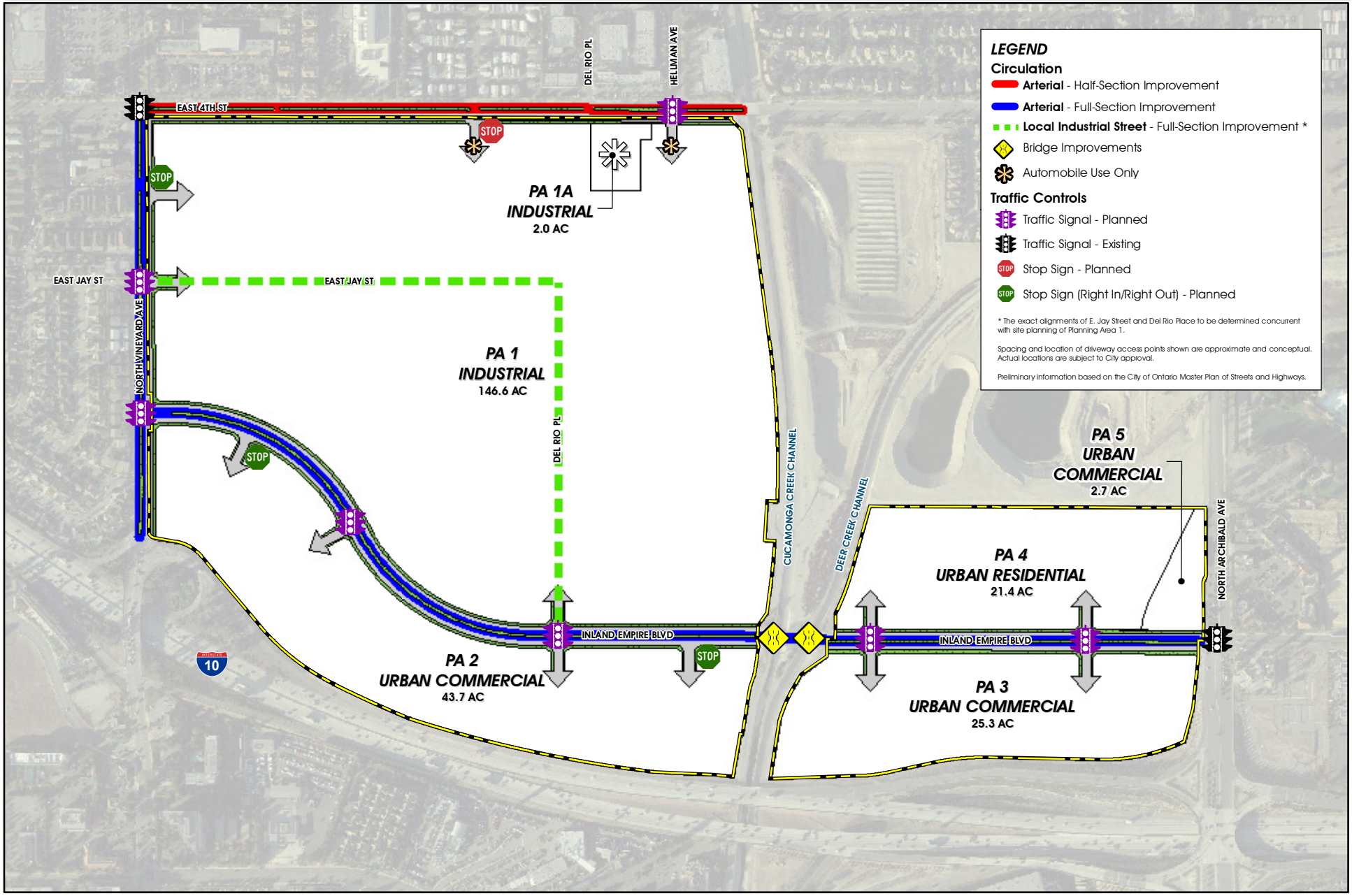

0 150 300 600 Feet

FIGURE 3-1

CONCEPTUAL VEHICULAR CIRCULATION AND MOBILITY PLAN

a. North Vineyard Avenue – Principal Arterial

North Vineyard Avenue forms the western boundary of Planning Area 1 and Planning Area 2. This roadway provides access to the Specific Plan area from the west via Inland Empire Boulevard and East Jay Street. Driveway access into Planning Area 2 directly from North Vineyard Avenue is not permitted. Bus stops that existed along the MEREDITH INTERNATIONAL CENTRE property frontage with North Vineyard Avenue as of the 2015 Specific Plan Amendment was approved will be relocated/reconstructed as part of development of this CENTRE in accordance with applicable Omnitrans guidelines and to the satisfaction of the Ontario City Engineer. The new alignment of Inland Empire Boulevard results in a "T" intersection at Plaza Serena and North Vineyard Avenue off-site.

The width of North Vineyard Avenue varies along the MEREDITH INTERNATIONAL CENTRE property frontage; however, the typical cross-section of North Vineyard Avenue is shown below. As shown, the segment of North Vineyard Avenue abutting the Specific Plan area features a 125-foot wide right-of-way (ROW), including 86 feet of pavement, a 14-foot wide raised median, curb and gutter improvements, and landscaped parkways on both sides of the street. On the east side of the street, the parkway includes an eight-foot (8') wide park strip adjacent to the curb and a five-foot (5') wide sidewalk. Street parking is not allowed on the east side of the street. The 12-foot wide parkway on the west side of the street was existing as of the date of the writing of the 2015 Specific Plan Amendment and features a curb-adjacent parkway strip of varying width and a sidewalk of varying width. North Vineyard Avenue features a Class II bikeway on the west and east sides of the street, south of Inland Empire Boulevard.

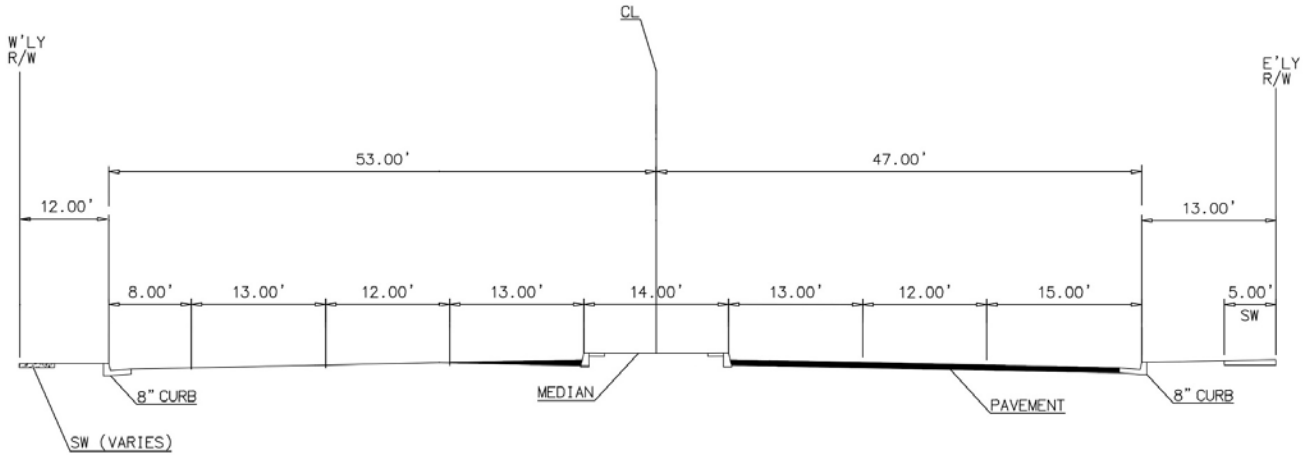

North Vineyard Avenue Cross-Section

b. North Archibald Avenue

North Archibald Avenue forms the eastern boundary of Planning Area 3 and Planning Area 5 and provides access to the Specific Plan area from the east. Driveway access into Planning Area 3 directly from North Archibald Avenue is not permitted. The typical roadway segment improvements on North Archibald Avenue that were in place at the time the 2015 Specific Plan Amendment was prepared are expected to remain in place. Additionally, the two driveways into Planning Area 5 that were in place at the time the 2015 Amendment to this Specific Plan was prepared are expected to remain.

Implementation of the MEREDITH INTERNATIONAL CENTRE will require minor improvements to the North Archibald Avenue/Inland Empire Boulevard intersection. As shown in the cross-section below, the improved intersection will feature a 143-foot wide ROW. Within the ROW, there is 127 feet of pavement, a four-foot (4') wide raised center median, curb and gutter improvements, and parkways on both sides of the street with no street parking. On the west and east sides of the street, the parkway includes a six-foot (6') wide, curb-adjacent sidewalk.

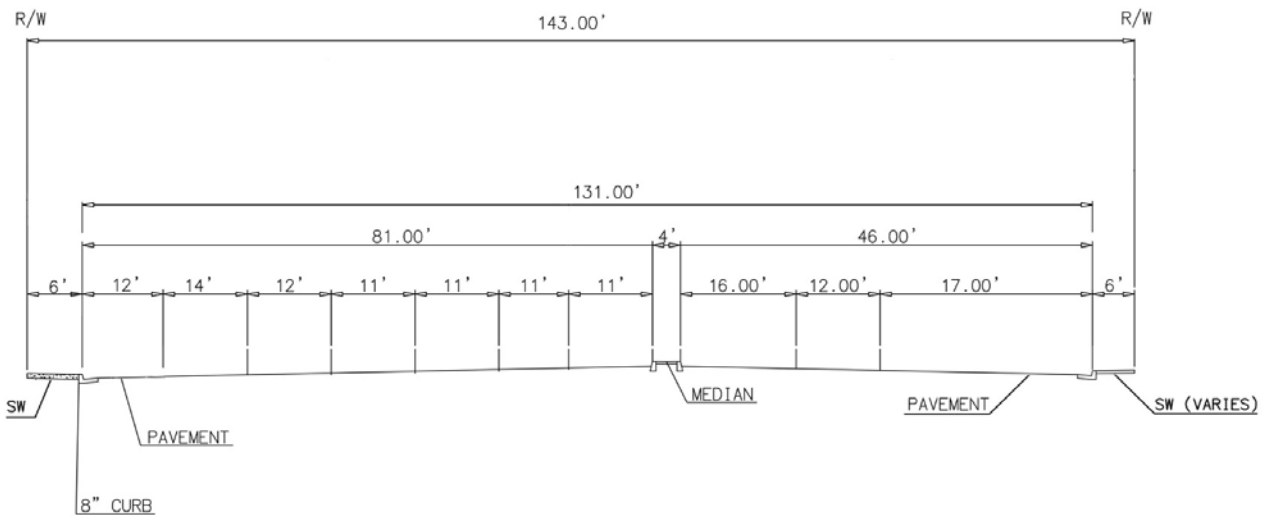

North Archibald Avenue/Inland Empire Boulevard Intersection Cross-Section

c. East 4th Street – Principal Arterial

East 4th Street forms the northern boundary of Planning Area 1 and Planning Area 1A and provides access to MEREDITH INTERNATIONAL CENTRE from the north. Driveways are permitted to access Planning Area 1 and Planning Area 1A from East 4th Street and will primarily be used for passenger vehicles. Driveways accommodating truck traffic will not directly connect to East 4th Street (trucks will access Planning Areas 1 and 1A from driveways along East Jay Street/Del Rio Place). Median breaks are permitted subject to City of Ontario approval.

The typical cross-section of East 4th Street is shown below, but along much of the CENTRE's frontage, East 4th Street exceeds its typical width to accommodate a free right turn at North Vineyard Avenue. The typical segment of East 4th Street features 58 feet of pavement, a 14-foot wide raised center median, 14-foot wide landscaped parkways on both sides of the street, and curb and gutter improvements within a 100-foot wide ROW with no street parking. On the south side of the street, the landscaped parkway includes an eight-foot (8') wide curb adjacent park strip and a five-foot (5') wide sidewalk with. The parkway on the north side of the street was existing as of the date of the writing of this 2015 Specific Plan Amendment and features a curb-adjacent park strip of varying width and a sidewalk of varying width.

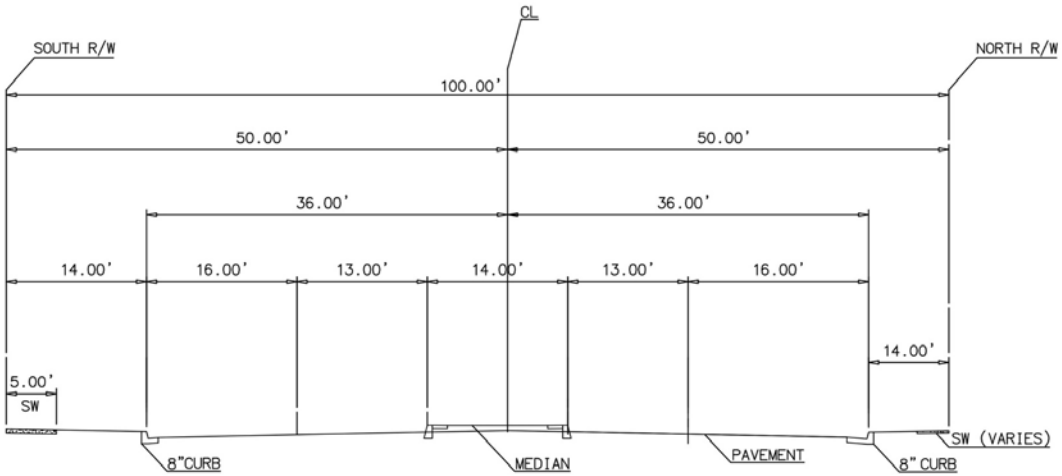

East 4th Street Cross-Section

d. Inland Empire Boulevard – Principal Arterial

Major east-west circulation within MEREDITH INTERNATIONAL CENTRE is provided via Inland Empire Boulevard, which also serves as a primary connector between North Vineyard Avenue and North Archibald Avenue north of Interstate 10. Vehicular access to Planning Area 1 is provided from Del Rio Place. Vehicular access to Planning Area 2, Planning Area 3, and Planning Area 4 is provided via driveways connecting to Inland Empire Boulevard.

At the time the 2015 Amendment to this Specific Plan was prepared, Inland Empire Boulevard traversed through the southern portion of the Specific Plan property as a four-lane road segment. As part of MEREDITH INTERNATIONAL CENTRE's development, the road was planned to be widened and its alignment shifted northerly, west of the Cucamonga Creek Channel, to allow for its intersection with North Vineyard Avenue to be adequately spaced from the North Vineyard Avenue/Interstate 10 interchange. A traffic signal is provided at the relocated Inland Empire Avenue/North Vineyard Avenue intersection. The traffic signal located at the Inland Empire Boulevard/North Archibald Avenue intersection remains in place.

Outside of the Specific Plan boundary, improvements to Inland Empire Boulevard across the Cucamonga Creek and Deer Creek Channels include widening of the bridge spans. The bridge span widening accommodates road improvements on Inland Empire Boulevard associated with buildout of MEREDITH INTERNATIONAL CENTRE.

The typical cross-section of Inland Empire Avenue is shown below. As shown, Inland Empire Boulevard features a 100-foot wide ROW that includes 62 feet of pavement, a 14-foot wide raised center median, 12-foot wide parkways on both sides of the street, and curb and gutter improvements with Class II bike lanes and no street parking. The parkways feature a seven-foot (7') wide, curb-adjacent landscaped park strip and a five-foot (5') wide sidewalk. At the Cucamonga Creek Channel and Deer Creek Channel bridge spans, Inland Empire Boulevard tapers to 60 feet of pavement, a two-foot (2') wide raised center median, five-foot (5') wide sidewalks on both sides of the street, and curb and gutter improvements.

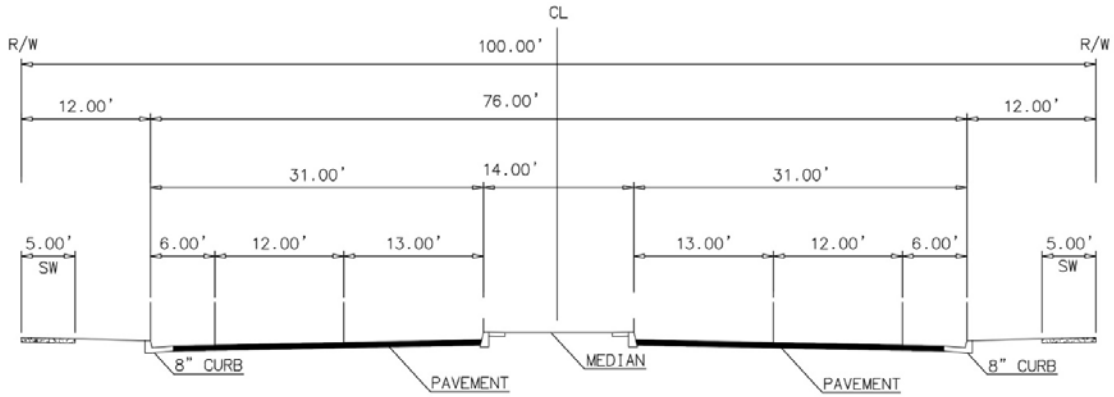

Inland Empire Blvd Cross-Section

e. Del Rio Place and East Jay Street – Industrial Streets

Two local industrial streets, Del Rio Place and East Jay Street, are provided in Planning Area 1. East Jay Street, an east-west oriented street, provides access from the west via a traffic signal at its intersection with North Vineyard Avenue. Del Rio Place, a north-south oriented street, provides access from the south to Planning Area 1 from Inland Empire Boulevard. A traffic signal is located at the intersection of Inland Empire Boulevard and Del Rio Place. Jay Street connects with Del Rio Place near the eastern portion of Planning Area 1.

As illustrated below, Del Rio Place and East Jay Street feature a 66-foot wide ROWs that include 40 feet of pavement with no street parking, 13-foot wide parkways on both sides of the street, and curb and gutter improvements. The parkways include an eight-foot (8') wide, curb-adjacent landscaped parkway strip and a five-foot (5') wide sidewalk.

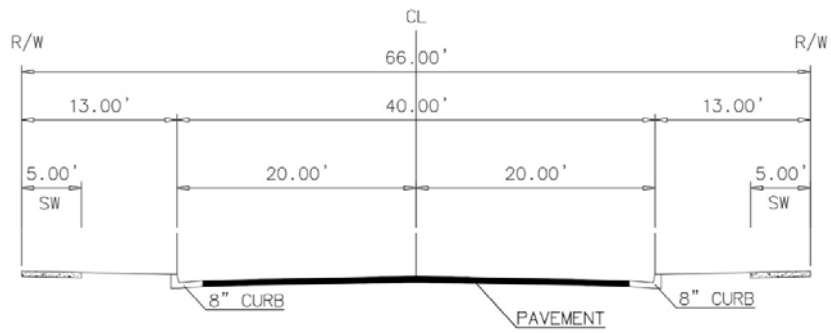

Del Rio Place and Jay Street Cross-Section

B. NON-VEHICULAR CIRCULATION PLAN

A network of sidewalks, walkways, and bikeways is provided within MEREDITH INTERNATIONAL CENTRE as shown in Figure 3-2, *Conceptual Non-Vehicular Circulation and Mobility Plan*. Given the mixture of land uses and the volume of passenger car and truck traffic circulating on the site, pedestrian, bicycle safety, and public transit was given careful consideration when preparing the design standards for MEREDITH INTERNATIONAL CENTRE.

The non-vehicular circulation plan promotes pedestrian movement, bicycle use, and encourages the use of available mass transit opportunities. To overcome the challenge of designing a safe non-vehicular mobility plan in an area with high volumes of vehicular traffic, pedestrian and vehicular traffic are separated where it is feasible to provide such separation.

This Specific Plan's *Non-Vehicular Circulation and Mobility Plan* is designed to encourage the use of non-vehicular modes of mobility. Inland Empire Boulevard that traverses the Specific Plan property in an east to west direction is a designated Class II Bikeway Corridor. A Class II bike lane is also provided on North Vineyard Avenue, south of Inland Empire Boulevard along the CENTRE's frontage. A connection is planned between the sidewalks on Inland Empire Boulevard and East 4th Street and the Cucamonga Creek Multipurpose Trail located between Planning Area 1 and Planning Area 4.

The Gold Line Foothill Construction Authority is studying the extension of a light rail transit (LRT) line to Ontario International Airport, which is tentatively envisioned to traverse along either the east side of the Cucamonga Creek Channel or Deer Creek Channel immediately west of Planning Area 3 and Planning Area 4. This Specific Plan acknowledges the potential off-site LRT alignment and anticipates its use by employees, visitors, and residents of MEREDITH INTERNATIONAL CENTRE.

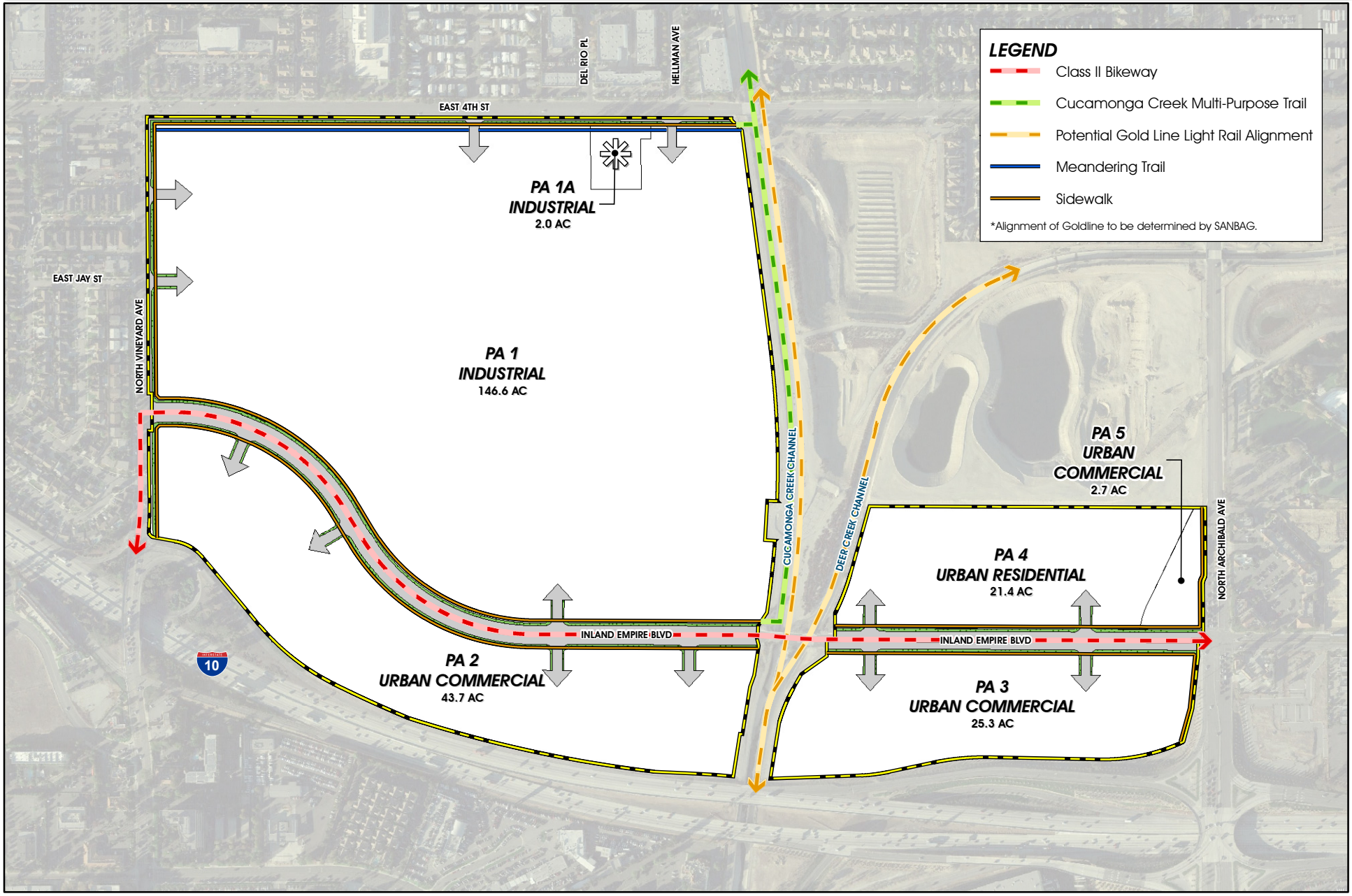

FIGURE 3-2

CONCEPTUAL NON-VEHICULAR CIRCULATION AND MOBILITY PLAN