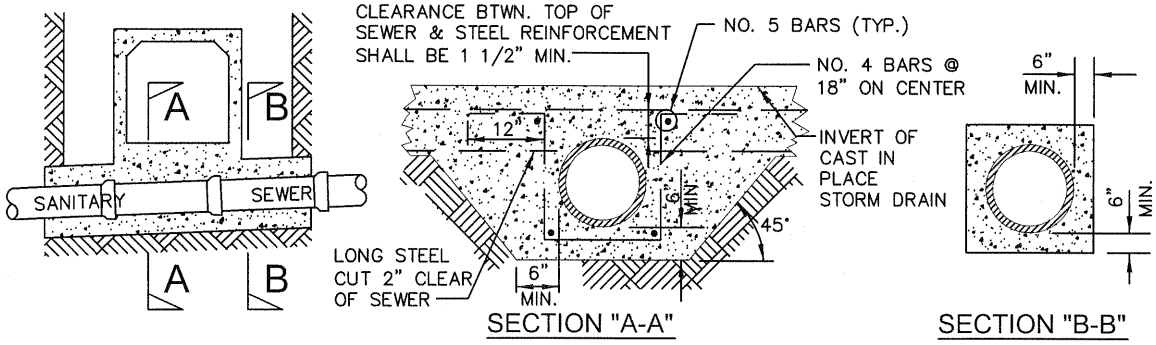

CASE 1

FOR EXISTING AND NEW SEWERS LESS THAN 15" IN DIAMETER WHERE CLEARANCE BETWEEN BOTTOM OF CAST IN PLACE STORM DRAIN & TOP OF SANITARY SEWER IS LESS THAN 6" AND WHERE THE SEWER IS APPROXIMATELY AT RIGHT ANGLES TO THE STORM DRAIN.

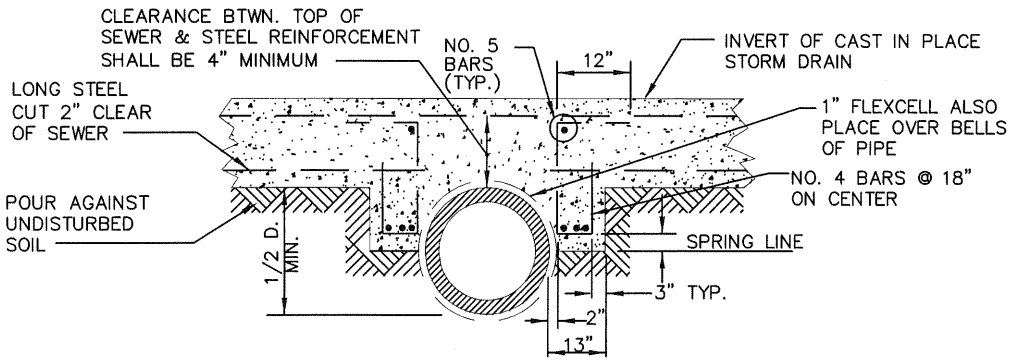

CASE 2

FOR EXISTING SANITARY SEWERS LESS THAN 15" IN DIAMETER WHERE EXISTING SEWER IS TO BE MAINTAINED IN PLACE AND WHERE CLEARANCE BETWEEN BOTTOM OF CAST IN PLACE STORM DRAIN AND TOP OF SANITARY SEWER IS LESS THAN 6".

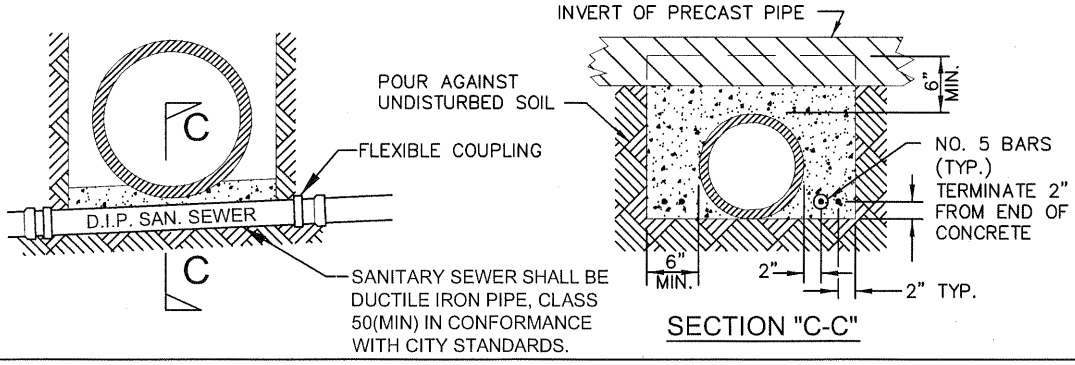

CASE 3

WHERE CLEARANCE BETWEEN BOTTOM OF PRECAST PIPE STORM DRAIN AND TOP OF SANITARY SEWER IS LESS THAN 6".

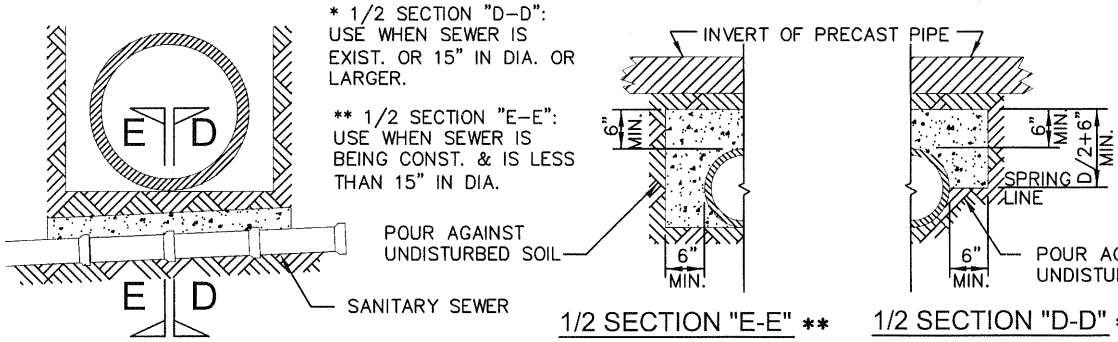

CASE 4

WHERE CLEARANCE BETWEEN BOTTOM OF PRECAST PIPE OR CAST IN PLACE STORM DRAIN AND TOP OF SANITARY SEWER IS FROM 6" TO 18".

NOTES

1. WHERE D.I.P. IS CALLED FOR, THE SANITARY SEWER SHALL BE CONSTRUCTED OR REPLACED WITH STANDARD DUCTILE IRON PIPE, IN THE CASE OF HOUSE CONNECTIONS, OR WITH CLASS "B" OR PRESSURE CLASS "350" DUCTILE IRON PRESSURE PIPE, IN THE CASE OF MAIN LINE SEWERS.
2. CONCRETE FOR ENCASEMENTS SHALL BE 3000 P.S.I. PORTLAND CEMENT CONCRETE OR BETTER, EXCEPT CASE 4, WHICH SHALL BE CLASS 450-C-2000 PER SECTION 201-1.1.2 STD. SPECIFICATION FOR PUBLIC WORKS CONSTRUCTION.
3. THE CONCRETE ENCASEMENT SHALL EXTEND ACROSS THE FULL WIDTH OF THE STORM DRAIN TRENCH PLUS AN ADDITIONAL 12" INTO UNDISTURBED EARTH ON EACH SIDE OF THE STORM DRAIN TRENCH.
4. SEE STD. DWG. NO. 4001 FOR WATER/SEWER SEPARATION CRITERIA.

APPROVED BY: 24079 08/15/06
JOHN P. SULLIVAN CITY ENGINEER — RCE — DATE

RECOMMENDED: 57875 08/14/06
ASST. UTIL. DIRECTOR/ENG. — RCE — DATE

REV	DESCRIPTION	BY	APP'D	DATE

CITY OF ONTARIO

PROTECTION FOR MAINLINE AND HOUSE CONNECTION SEWER

STANDARD DRAWING NUMBER **2102**