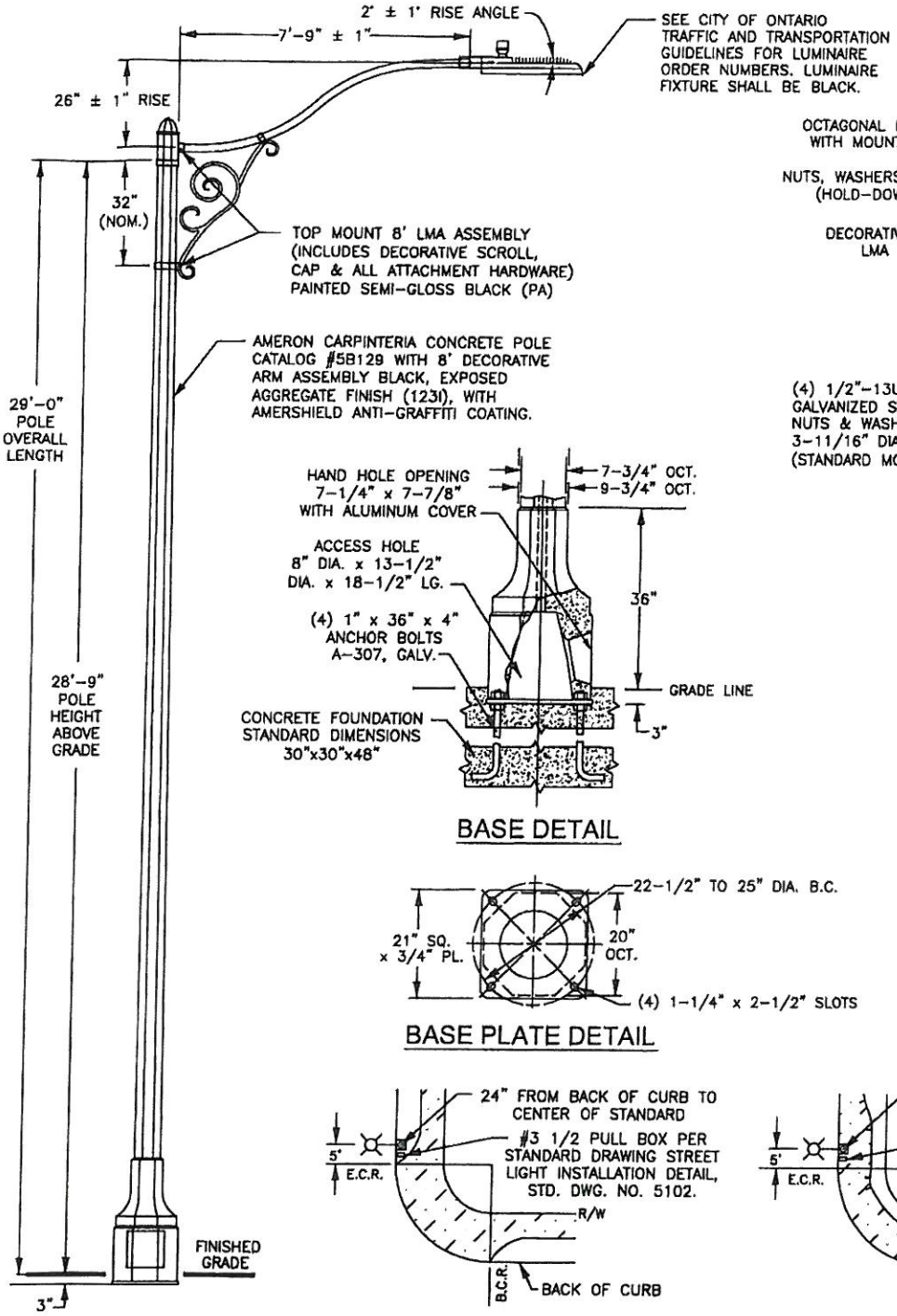

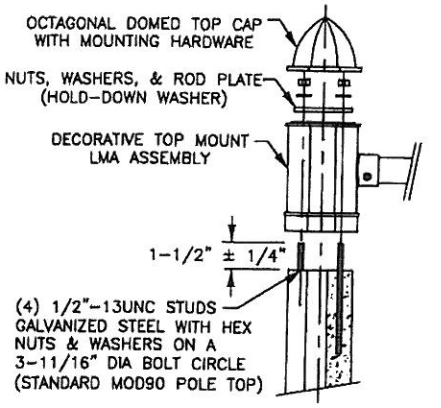

POLE TOP DETAIL

BASE DETAIL

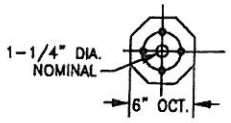

POLE TOP DETAIL

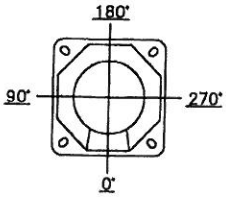

HAND HOLE

POLE ORIENTATION

BASE PLATE DETAIL

SIDEWALK ADJACENT TO RIGHT-OF-WAY

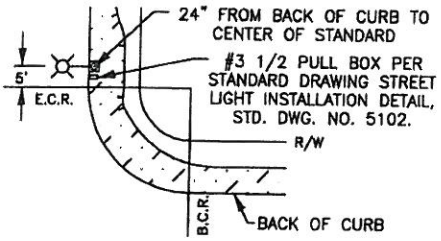

SIDEWALK ADJACENT TO CURB

STANDARD POLE LOCATION ADJACENT TO CURB RETURN

NOTE

STANDARD 5108 SHALL APPLY FOR STREET LIGHTS ALONG NMC ARTERIAL AND COLLECTOR STREETS, UNLESS OTHERWISE SPECIFIED BY THE CITY ENGINEER.

REGISTERED PROFESSIONAL ENGINEER
LOUIS ABI-YOUNES
No. 44485
CIVIL
STATE OF CALIFORNIA

APPROVED BY: 44485 11.4.11
LOUIS ABI-YOUNES, CITY ENGINEER — RCE — DATE

RECOMMENDED: 2013 10/21/12
TOM DANNA, TRAFFIC/TRANSPORTATION MANAGER — TE — DATE

REV	DESCRIPTION	BY	APP'D	DATE
2	LED Luminaire's Color	JMC		

CITY OF ONTARIO

CARPINTERIA STREET LIGHT STANDARD

STANDARD DRAWING NUMBER 5108